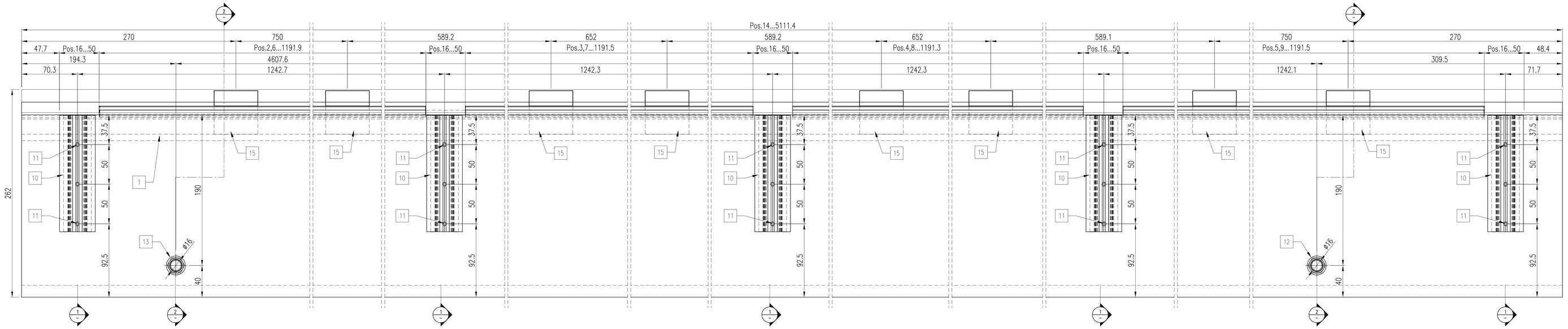

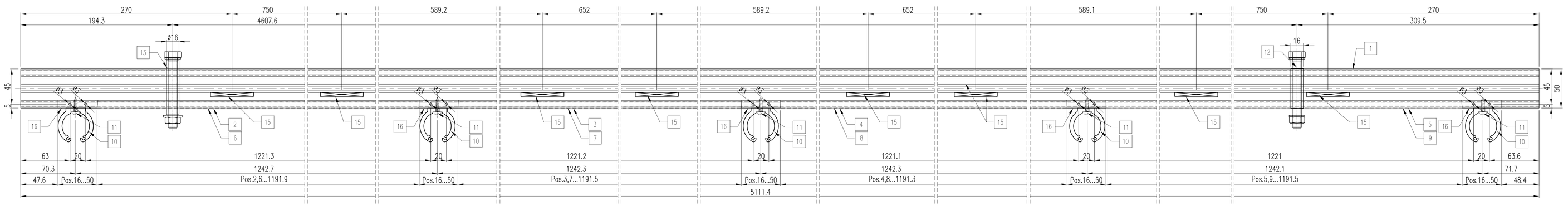

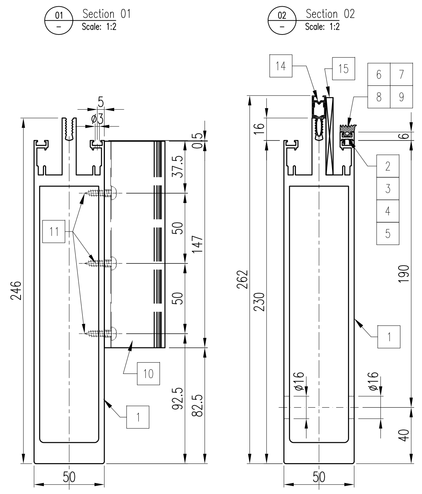

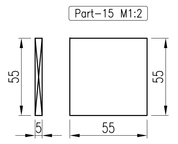

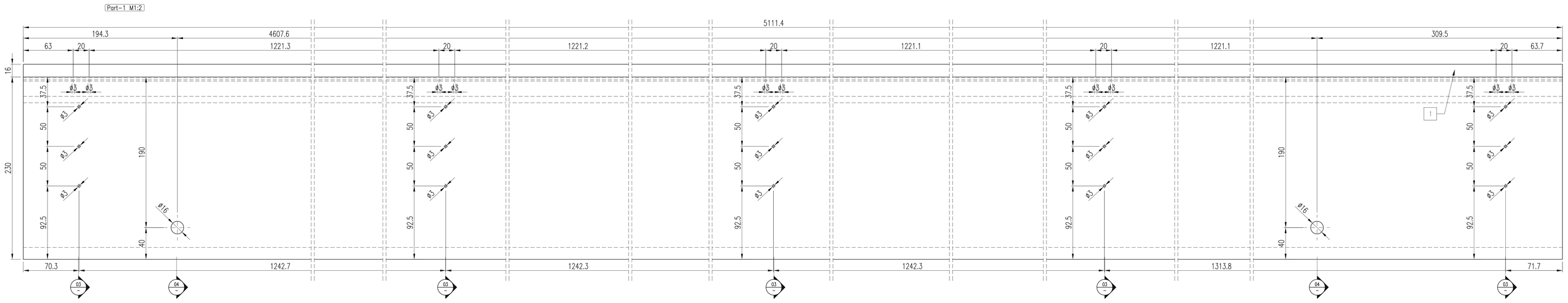

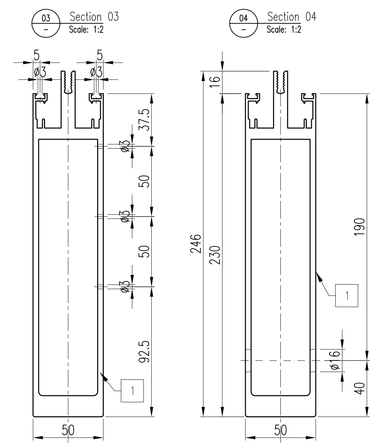

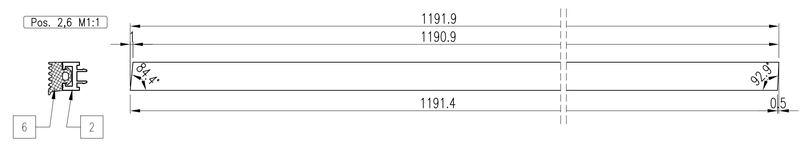

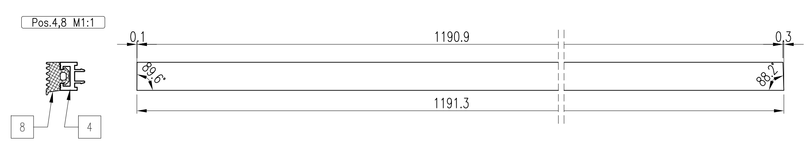

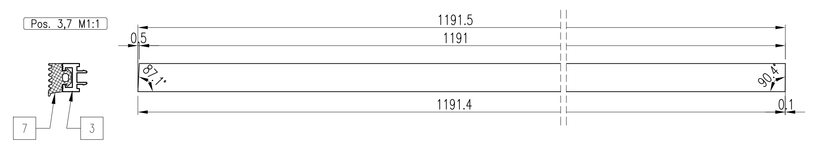

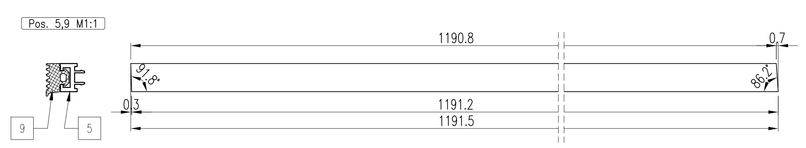

16	5	5	Item Silicone flange, ETEM, 76 680
15	38	8	Item PVC spacer 35x35x8
14	1	1	Item Hatch, ETEM, ET 080171
13	1	1	Item Fastening, 17.02-SET-002
12	1	1	Item Fastening, 17.02-SET-001
11	15	15	Item Self tapping screw, DIN 7981 4.8x19-C-H
10	5	5	Item T-joint, 17.02-TJ-001
9	1	1	Item Gasket, ETEM, ET 130455
8	1	1	Item Gasket, ETEM, ET 130455
7	1	1	Item Gasket, ETEM, ET 130455
6	1	1	Item Gasket, ETEM, ET 130455
5	1	1	Item Profile, ETEM, E 85640
4	1	1	Item Profile, ETEM, E 85640
3	1	1	Item Profile, ETEM, E 85640
2	1	1	Item Profile, ETEM, E 85640
1	1	1	Item Profile, ETEM, E 85109
0	1	1	Item Mullion 17.02-MULL-001
Pos	MS	MG	EH Benennung

DEPT.	NAME	DATE
DESIGNER	GLASSCON	30.07.2021

DRAWING SUBJECT TO COPYRIGHT. THIS DOCUMENT IS THE PROPERTY OF GLASSCON S.A. IT MAY NOT BE USED, REPRODUCED, DISTRIBUTED, PUBLISHED AND EXHIBITED WITHOUT THE EXPRESS CONSENT OF THE OWNER

TITLE: LF08-Facade

GLASSCON premium architectural building skins

GLASSCON Gmbh Hatzle Weiler strße 2 D-82515 Grünwald/Munchen Germany
Tel +49(0)89/48 00 19-0
info@glasscon.com www.glasscon.com

MAIN SCALE	MODIFICATION INDEX	DRAWING No	ITEM No
1 : 2	a b c d	LF_08_1702_FAB_MUL_01_000	

Aéroport de Brazzaville
Avant-Projet Détaillé
Pavillon Présidentiel

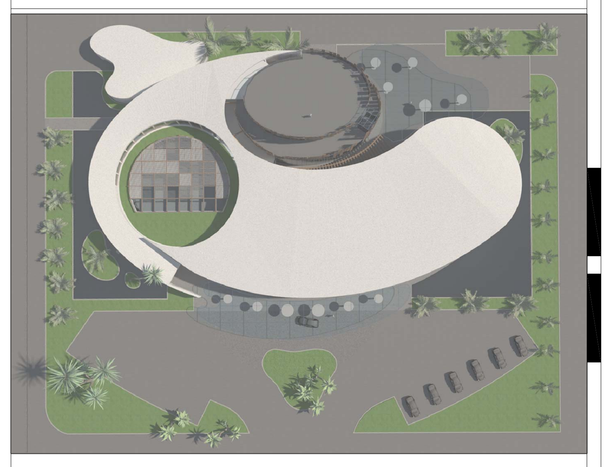

FABRICATION DRAWING

SecuRitz
Zone Afrique Centrale

TITLE: LF08-Facade

Approval is only for general conformance with the design concept of the Project and the information given .
Contractor is responsible for dimensions to be confirmed and correlated at the job site.

- ☐ APPROVED
- ☐ APPROVE WITH CHANGES NOTED
- ☐ REVISE AND SUBMIT
- ☐ REJECTED

DATE:
SIGNATURE:

GLASSCON GmbH - Fassadenbau
Premium Architectural Building Skins
Hatzle-Weiler-Straße 2 / Munchen
82515 Grünwald / München - GERMANY
Deutsche Bank - Swift: DEUTDEMMMUC
IBAN DE87700700240061340700
VAT-id DE295381120 - Munchen HRB 212726